Scan the QR code to see the manual.

OWNER'S MANUAL

GAS HOB

Before beginning installation, read these instructions carefully. This will simplify installation and ensure that the product is installed correctly and safely. Leave these instructions near the product after installation for future reference.

ENGLISH

CBGZ2414S CBGZ3016S

MFL71950101
Rev.01_112922

www.lg.com

Copyright © 2022 LG Electronics Inc. All Rights Reserved.

TABLE OF CONTENTS

This manual may contain images or content that may be different from the model you purchased.

This manual is subject to revision by the manufacturer.

SAFETY INSTRUCTIONS

READ ALL INSTRUCTIONS BEFORE USE 3
WARNING 3
CAUTION 5
CARING FOR THE ENVIRONMENT 9

INSTALLATION

Product Overview 10
Technical Instructions 11
Installation 11

OPERATION

Using the Surface Burners 19

MAINTENANCE

Care and Cleaning 21

TROUBLESHOOTING

Before Calling for Service 23

APPENDIX

Product Fiche 25

SAFETY INSTRUCTIONS

READ ALL INSTRUCTIONS BEFORE USE

The following safety guidelines are intended to prevent unforeseen risks or damage from unsafe or incorrect operation of the appliance. The guidelines are separated into '**WARNING**' and '**CAUTION**' as described below.

Safety Messages

⚠	This symbol is displayed to indicate matters and operations that can cause risk. Read the part with this symbol carefully and follow the instructions in order to avoid risk.
⚠	**WARNING** This indicates that the failure to follow the instructions can cause serious injury or death.
⚠	**CAUTION** This indicates that the failure to follow the instructions can cause the minor injury or damage to the product.

WARNING

⚠ WARNING

- To reduce the risk of explosion, fire, death, electric shock, injury or scalding to persons when using this product, follow basic precautions, including the following:

Installation

- The flexible hose shall be fitted in such a way that it cannot come into contact with a moveable part of the housing unit and does not pass through any space susceptible of becoming congested.

- This appliance shall be installed in accordance with regulations in force and only used in a well ventilated space.
- Prior to installation, ensure that the gas and electrical supply complies with the type stated on the rating plate.
- Where this appliance is installed in marine craft or in caravans, it should not be used as a space heater.
- The gas pipe and electrical cable must be installed in such a way that they do not touch any parts or the appliance.
- After installation, please dispose of the packaging with due regard to safety and the environment.

Operation

- Do not allow children to play near or with the appliance. The appliance gets hot when it is in use. Children should be kept away until it has cooled.
- Only use the appliance for preparing food.
- Do not modify this appliance. Burner panel is not designed to operate from an external timer or separate remote control system.
- The use of a gas cooking appliance results in the production of heat and moisture in the room in which it is installed. Ensure that the kitchen is well ventilated : keep natural ventilation holes open or install a mechanical ventilation device (mechanical extractor hood).
- Do not use this appliance if it in contact with water. Do not operate this appliance with wet hands.
- The heating and cooking surfaces of the appliance become hot when they are in use, take all due precautions.
- Do not use large cloths, tea towels or similar as the ends could touch the flames and catch fire.
- Never leave the appliance unattended when cooking.
- Unstable or misshapen pans should not be used on the appliance as they can cause an accident by tipping or spillage.
- Do not use or store flammable materials in the storage drawer near this appliance.

- Perishable food, plastic items and aerosols may be affected by heat and should not stored above or below the appliance.
- Do not spray aerosols in the vicinity of this appliance while it is in operation.
- Ensure the control knobs are in the '●' position when not in use.
- If you smell the gas, take the following instructions.
  - Do not turn on the lights.
  - Do not switch on/off any electrical appliance and do not touch any electric plug.
  - Do not use a telephone.
  1) Stop using the product and close the middle valve.
  2) Open the window for ventilate.
  3) Contact our service center using a phone outside the room.
  - The fuel gas contains mercaptan so you can smell a gas leak (smell of spoiled garlic or egg) even if there is only 1/1000 of gas in the air.
- When disposing of an old appliance, make it unusable, by cutting off the cable.

Maintenance

- Never use abrasive or caustic cleaning agents.
- This appliance should only be repaired or serviced by an authorised Service Engineer and only genuine approved spare parts should be used.

CAUTION

⚠ CAUTION

- To reduce the risk of injury to persons, malfunction, or damage to the product or property when using the appliance, follow basic safety precautions, including the following:

Installation

- This appliance should be installed by a qualified technician or installer.
- This appliance must be connected to the mains power supply by a specially licensed electrician only.
- To maintain the efficiency and safety of your appliance, we recommend you always use original spare parts and to call only our authorized service agents in case of need.
- The adjustment conditions for this appliance are stated on the label or data plate.
- Remove all packaging before using the appliance.
- After unpacking the appliance, make sure the product is not damaged and that the connection cord is in perfect condition. Otherwise, contact the dealer before installing the appliance.
- The adjacent furniture and all materials used in the installation must be able to withstand a minimum temperature of 85 °C above the ambient temperature of the room it is located in, whilst in use.
- Protect your appliance against atmospheric effects. Do not expose it to effects such as sun, rain, snow etc.
- The use of a gas cooking appliance results in the production of heat, moisture and products of combustion in the room in which it is installed. Ensure that the kitchen is well ventilated especially when the appliance is in use: keep natural ventilation holes open or install a mechanical ventilation device (mechanical extractor hood).
- Prolonged intensive use of the appliance may call for additional ventilation, for example opening of a window, or more effective ventilation, for example increasing the level of mechanical ventilation where present.

Operation

- This appliance is designed to be operated by adults.
- Children can also injure themselves by pulling pans or pots off the appliance.

- This appliance is not intended for use by children or other persons whose physical, sensory or mental capabilities or lack of experience and knowledge prevents them from using the appliance safety without supervision or instruction by a responsible person to ensure that they can use the appliance safety.
- Accessible parts may be hot when the grill is in use. Young children should be kept away.
- Accessible parts may become hot during use. Young children should be kept away.
- This appliance is intended for domestic cooking only. It is not designed for commercial or industrial purposes.
- Prolonged intensive use of the appliance may call for additional ventilation, for example opening of a window, or increasing the level of mechanical ventilation where present.
- Use heat-resistant pot holders or gloves when handling hot pots and pans.
- Do not let pot holders come near open flames when lifting cookware.
- Take care not to let pot holders or gloves get damp or wet, as this causes heat to transfer through the material quicker with the risk of burning yourself.
- Only ever use the burners after placing pots and pans on them. Do not heat up any empty pots or pans.
- Never use plastic or aluminium foil dishes on the appliance.
- When using other electrical appliances, ensure the cable does not come into contact with the appliance surfaces of the cooking appliance.
- If you will not use the appliance for a long time, plug it off. Keep the main control switch off. Also when you do not use the appliance, keep the gas valve off.
- In the case of the owner of the artificial organ, Be careful because high voltage may be generated in the spark by ignition. When there is an abnormality problem in the body, please consult your doctor.
- Do not hang towels, dishcloths or clothes from the appliance.

- Do not use a tea towel or similar materials in place of a pot holder. Such cloths can catch fire on a hot burner.
- When using glass cookware, make sure it is designed for top plate cooking. If the surface is made of glass-cracked, switch off the appliance to avoid defeat electrcution.
- To minimise the possibility of burns, ignition of flammable materials and spillage, turn cookware handles toward the side or center of the top plate without extending over adjacent burners.
- Always turn burner controls off before removing cookware.
- Carefully watch foods being fried at a high flame setting.
- Always heat fat slowly and watch as it heats.
- Foods for frying should be as dry as possible. Frost on frozen foods or moisture on fresh foods can cause hot fat to bubble up and over the sides of the pan.
- Never try to move a pan of hot fat, especially a deep fat fryer. Wait until the fat is completely cool.
- In the event of the burner flames being accidentally extinguished, turn off the burner control and do not attempt to re-ignite the burner for at least 1 min.
- This appliance is for cooking purposes only. It must not be used for other purposes, for example room heating.
- In case of hotplate glass breakage:
  - shut immediately off all burners and any electrical heating element and isolate the appliance from the power supply.
  - do not touch the appliance surface.
  - do not use the appliance.

Maintenance

- Before attempting to clean the appliance, it should be disconnected from the mainsand cooled.
- You should not use a steam jet or any other high pressure cleaning equipment to cleanthe appliance.

- If the supply cord is damaged, it must be replaced by the manufacturer, its service agent or similarly qualified persons in order to avoid a hazard.
- Do not repair or replace any part of the appliance unless specifically recommended in the manual. All other servicing should be done by a qualified technician.

CARING FOR THE ENVIRONMENT

Disposal of Your Old Appliance

- This crossed-out wheeled bin symbol indicates that waste electrical and electronic products (WEEE) should be disposed of separately from the municipal waste stream.
- Old electrical products can contain hazardous substances so correct disposal of your old appliance will help prevent potential negative consequences for the environment and human health. Your old appliance may contain reusable parts that could be used to repair other products, and other valuable materials that can be recycled to conserve limited resources.
- You can take your appliance either to the shop where you purchased the product, or contact your local government waste office for details of your nearest authorised WEEE collection point. For the most up to date information for your country please see www.lg.com/global/recycling.

INSTALLATION

Product Overview

Parts and Features

	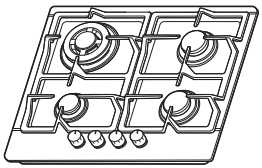	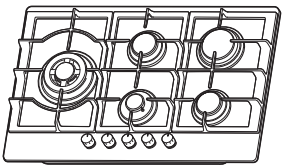
Model	CBGZ2414S	CBGZ3016S
Pan Support	Cast iron	
Wok pan Support	Not available	
Top plate	Stainless steel	
Dimensions (W X D X H)	594 mm X 514 mm X 90 mm	750 mm X 510 mm X 90 mm
Ignition device	Continuous Ignition Type	
Gas connection	G1/2 thread	
Electric supply	220~240 Vac, 50 Hz/60 Hz, 2.0 W	
Burner Feature	Triple-Crown (1 ea) Semi-rapid (2 ea) Auxiliary (1 ea)	Triple-Crown (1 ea) Rapid (1 ea) Semi-rapid (2 ea) Auxiliary (1 ea)
ΣQn	8.5 kW	11.5 kW

Accessories

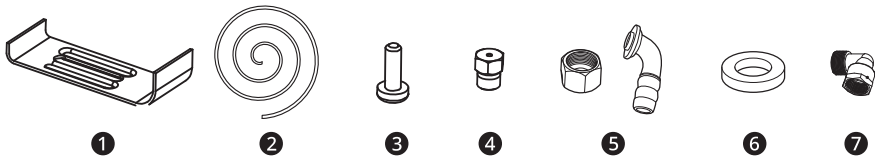

❶ Bracket (4 ea)

❷ Sponge (4 ea)

❸ Screw (4 ea)

❹ Injector for LPG G30 29 mbar (CBGZ2414S 4 ea, CBGZ3016S 5ea)

❺ LPG Gas Pipe Elbow (1 ea, 1 ea)

❻ Seal (3 ea)

❼ LNG Gas Pipe Elbow (1 ea)

Technical Instructions

Technical Instructions

⚠ WARNING

- Do not modify this appliance.
- This appliance must be installed by an authorised technician or installer.
- Prior to installation, ensure that the local distribution conditions (nature of the gas and gas pressure) and the adjustment of the appliance are compatible.
- The adjustment conditions for this appliance are stated on the label (or data plate).
- This appliance is not connected to a combustion products evacuation device. It should be installed and connected in accordance with current installation regulations. Particular attention should be given to the relevant requirements regarding ventilaton.
- The device shall not be operated for more than 15 seconds. If after 15 seconds the burner has not lit, stop operating the device and open the compartment door and/or wait at least 1 minute before attempting a further ignition of the burner.
- Before installing, turn off the gas and electricity supply to the appliance.
- All appliances containing any electrical components must be earthed.
- Ensure that the gas pipe and electrical cable are installed in such a way that they do not touch any parts of the appliacne which may become hot.
- Gas pipe or connector should not be bent or blocked by any other appliances.
- Check the dimensions of the appliance as well as the dimensions of the gap to be cut in the kitchen unit.
- The panels located above the work surface, directly next to the appliance, must be made of nonflammable material. Both the stratified surfacing and the glue used to secure it should be heat resistant to prevent deterioration.
- Turn on appliance tap and light each burners. Check for a clear blue flame without yellow tipping.

  If burners show any abnormalties, check the following :

  - Burner lid positioned correctly
  - Flame spreader positioned correctly
  - Burner vertically aligned with injector nipple
- A full operational test and a test for possible leakages must be carried out by the technician after installation.
- The fiexible hose shall be fitted in such a way that it cannot come into contact with a moveable part of the housing unit and does not pass through any space susceptible of becoming congested.

Installation

Dimensions and Clearances

This appliance is to be built into a kitchen unit or 600 mm worktop, providing the following minimum distances are allowed;

- The edges of the hob must be a minimum distance of 60 mm from a side or rear wall.
- 700 mm between the highest point of the hob surface including the burners and the underside of any horizontal surface directly above it.
- 400 mm between the hob surfaces, providing that the underside of the horizontal surface is in line with the outer edge of the hob. If the underside of the horizontal surface is lower than

400 mm, then it must be at least 50 mm away from the outer edges of the hob.

- There should be 50 mm clearance around the appliance.
- There should be 50 mm clearance between the hob surface and any combustible materials.
- If the installation surface is narrow, install the heatproof plate on the right, left and back.
- It is necessary to be built into kitchen furniture as indicated below. Clearances are required when fitting the hob with a cooker hood above.

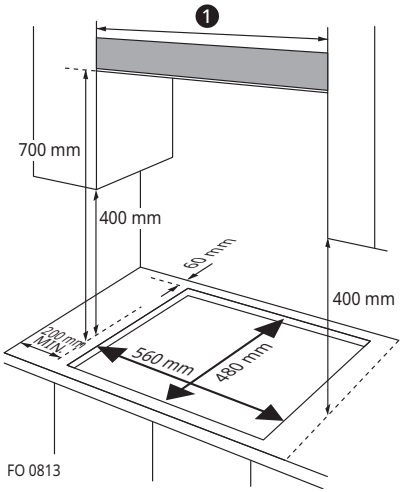

	CBGZ2414S	CBGZ3016S
❶	600 mm	900 mm

- You must have a gap of at least 25 mm and at most 74 mm between the underneath of the appliance and any surface that is below it.
  - An oven must have forced ventilation to install a hob above it.
  - Check the dimensions of the oven in the installation manual.
  - The cut out size must obey the indication.

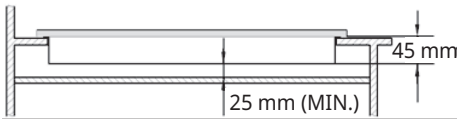

Installing the Appliance

Sponge

- Remove the pan supports, the burner lid and flame spreader and carefully turn the appliance upside down and place it on a cushioned mat. Take care that the Ignition devices and flame supervision devices are not damaged in this operation.
- Attach the sponge provided around the edge of the appliance.
- Do not leave a gap in the sealing agent or overlap the thickness.

The thickness of the sponge material is 3 mm. The width of the sponge material is 10 mm. Attach the sponge around the edge of the hole in the worktop.

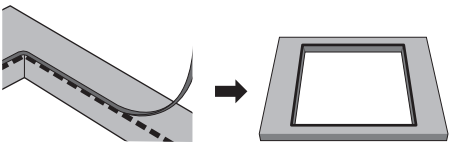

⚠ CAUTION

- Do not use a silicon sealant to seal the appliance against the aperture. This will make it difficult to remove the appliance from the aperture in future, particularly if it needs to be serviced.

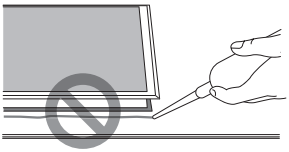

- Make sure to install the stabilizing brackets to prevent tipping of the appliance.

1 Place the bracket ❷ over the holes that match the size of the screws. There are one set of screw holes in each corner of the hob. Slightly tighten a screw ❸ through the bracket ❷ so that the bracket is attached to the hob. Adjust the position.

2 Carefully turn the hob back over and then gently lower it into the hole that you have cut out.

3 On the underneath of the hob, adjust the brackets into a position that is suitable for your worktop. Then fully tighten the screws to secure the hob into position.

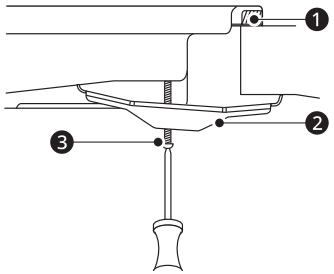

CBGZ2414S

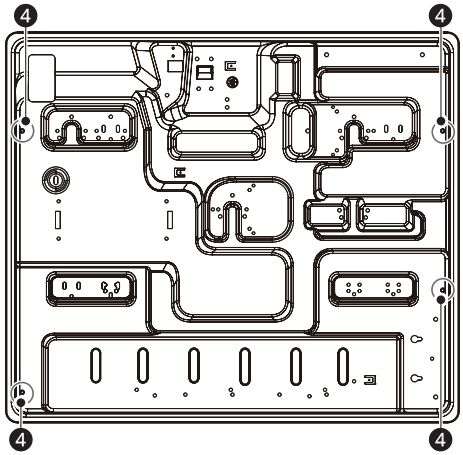

❹ Screw Position

CBGZ3016S

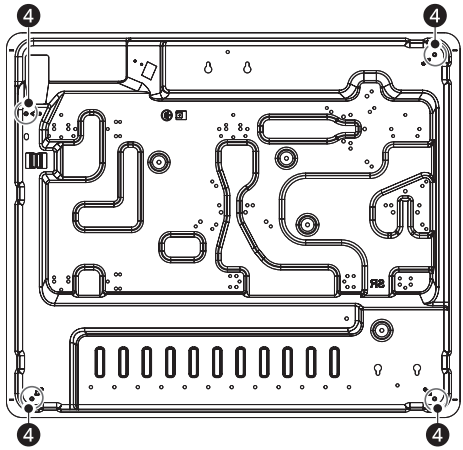

❹ Screw Position

Gas Connection

NOTE

- This appliance must be installed and connected in accordance with installation regulations in force in the country in which the appliance is to be used.
- This appliance is supplied to run on LPG and natural gas. Conversion for use on LPG and natural gases must only be undertaken by a qualified person.

- It is the law that all gas appliances are installed by competent persons in accordance with the current edition of the Gas Safety Installation and Use Regulations.
- It is in your interest and that of safety to ensure compliance with the law.
- In the UK, GASSAFE registered installers work to safe standards of practice. The hob must also be installed in accordance with the current edition of BS 6172.
- Failure to install the hob correctly could invalidate the warranty, liability claims and lead to prosecution.
- The appliance must be connected in accordance with the currently applicable regulations.

- Before installing the appliance, check that the local conditions (type of gas and pressure) are compatible with the appliance settings. The permissible appliance settings can be found on the rating plate.
- Connection to the gas lines and seal fitting must be carried out professionally according to the currently applicable standards.

Gas Connection on the Appliance

The gas connection is located at the rear right of the appliance.

Only use connecting lines or flexible hoses (tubes) which comply with the applicable regulations and which are approved for this purpose.

Gas supply replacement and installation guidelines:

- Screw the female threaded elbow and the seal to the end of the gas pipe.
- Hold the elbow with a wrench and connect the flexible gas connecting tube (hose) to the elbow.

LNG

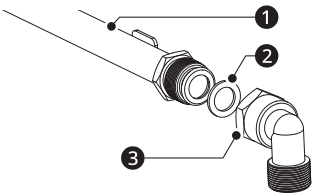

LPG

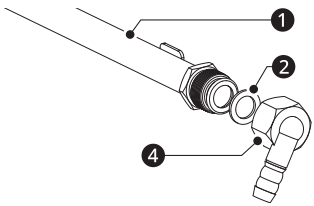

❶ Gas Pipe ❷ Seal

❸ G1/2" female threaded elbow (suitable for 24 mm wrench)

❹ Ø11.5 female threaded elbow (suitable for 24 mm wrench)

Flexible hose

If you use flexible hoses, make sure that:

- The hoses must not become trapped or squashed.
- The hoses must not be subject to twisting or pulling forces.
- The hoses must not come into contact with sharp edges or cutting edges.
- The hoses must not go behind the gas hob or close to the hot air exits.
- The hoses must come into contact with parts that could reach a temperature higher than 70 °C, above room temperature. The hoses should be fine under these conditions.
- The flexible hose (tube) shall be fitted in such a way that it cannot come into contact with a moveable part of the housing unit (e.g. a drawer) and does not pass through any space susceptible of becoming congested.
- After the installation, check if there is any gas leak, using soap or liquid detergent foam.

Ensure that the full length of the hoses are accessible for inspection.

⚠ WARNING

- Do not use plastic hoses to connect gas hob because they can cause a leakage. The use of metal flexible hoses to connect home appliances is recommended.

Gas Category, Gas Type and Destination Country (for All Models)

Gas category	Gas type	Destination country
$I_{3+(28\text{-}30/37)}$	G30 butane at 28-30 mbar and G31 propane at 37 mbar	BE, CH, CY, CZ, ES, FR, GB, GR, IE, IT, LT, LU, LV, PT, SK, SI

Gas category	Gas type	Destination country
$I_{3B/P(30)}$	G30 butane and G31 propane at 30 mbar	BE, CY, DK, EE, GB, HU, IT, LT, NL, NO, SE, SI, SK, RO, HR, TR, BG, IS, LU, MT, FI
I_{2H} I_{2E} I_{2E^+}	G20 methane at 20 mbar	AT, CH, CZ, DK, ES, FI, GB, GR, IE, IS, IT, PT, SE, SI, SK, DE, LU, GE, FR
II_{2H3+}	G20 at 20 mbar, G30 butane at 28-30 mbar and G31 propane at 37 mbar	CH, CZ, ES, GB, GR, IE, IT, PT, SI
$II_{2H3B/P(30)}$	G20 at 20 mbar, G30 butane and G31 propane at 30 mbar	CH, CZ, DK, FI, GR, SE, SI, SK
II_{2E+3+}	G20/G25 at 20/25 mbar, G30 butane at 28-30 mbar and G31 propane at 37 mbar	BE, FR
$II_{2H3B/P}$	I2H: G20 methane at 13,20 mbar I3B/P: G30 butane at 28-30 mbar and G31propane at 37 mbar	CH, CZ, DK, FI, GR, SE, SI, SK, RU, KZ, BY, UA, AM, AZ, GE
II_{2H3+}	I2H: G20 methane at 20 mbar I3+: G30 butane at 30 mbar and G31 propane at 37 mbar	CH, CZ, ES, GB, GR, IE, IT, PT, SI
II_{2E+3+}	I2E: G20 methane at 20 mbar I3+: G30 butane at 30 mbar and G31 propane at 37 mbar	BE, FR
$I_{ELS(13)}$	G20 methane at 13 mbar	PL

Gas Specifications

Model no.	Gas type & pressure	Electrical power	Heat input and orifice size marked (mm)				Total heat input
			Triple-Crown burner	Rapid burner	Semi-rapid burner	Auxiliary burner	
CBGZ241 4S class: 3		220-240 V~ 50/60 Hz	4.0 kW (291 g/h)	-	1.75 kW (127 g/h)	1.0 kW (73 g/h)	8.5 kW (618 g/h)
	G31 37 mbar		1.00	-	0.66	0.50	NA
	G30 29 mbar		1.00	-	0.66	0.50	
	G20 20 mbar		1.50	-	1.0	0.78	
	G20 13 mbar		1.72	-	1.07	0.85	
CBGZ301 6S class: 3		220-240 V~ 50/60 Hz	4.0 kW (291 g/h)	3.0 kW (219 g/h)	1.75 kW (127 g/h)	1.0 kW (73 g/h)	11.5 kW (837 g/h)
	G31 37 mbar		1.00	0.87	0.66	0.50	NA
	G30 29 mbar		1.00	0.87	0.66	0.50	
	G20 20 mbar		1.50	1.30	1.0	0.78	
	G20 13 mbar		1.72	1.45	1.07	0.85	

Electrical Connection

- This appliance must be earthed.
- This appliance is designed to be connected to a 220~240 V, 50/60 Hz AC electricity supply.
- The wires in the mains lead are coloured in accordance with the following code;
  - Green/yellow = Earth
  - Blue = Neutral
  - Brown = Live
- Wiring diagram
  - CBGZ2414S

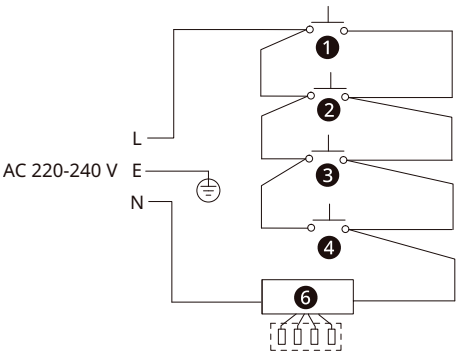

- CBGZ3016S

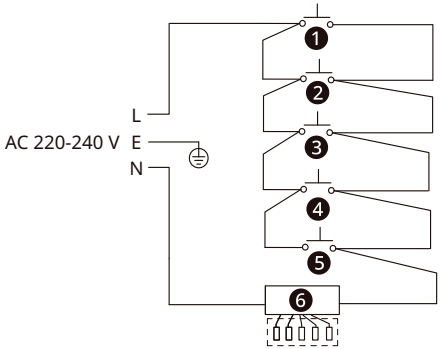

❶ Switch 1 ❷ Switch 2
❸ Switch 3 ❹ Switch 4
❺ Switch 5 ❻ Ignition

NOTE

- Make sure to connect the green and yellow wires to the terminal marked with the letter E or earth symbol.

Gas Adjustment

⚠ CAUTION

- Take precautions on the operations and adjustments to be carried out when converting from one gas to another.
- All work must be carried out by a qualified technician.
- Before you begin, turn off the gas and electricity supply to the appliance.

Change the Injector of the Burners.

1) Remove the pan support, burner lid and flame spreader.
2) Unscrew the injector ❶ using a 7 mm box spanner and replace it with the stipulated injector for new gas supply.
3) Carefully reassemble all the components.
4) After replacing the injectors, strongly tighten the injectors in place.

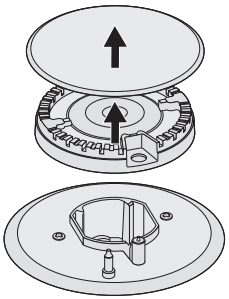

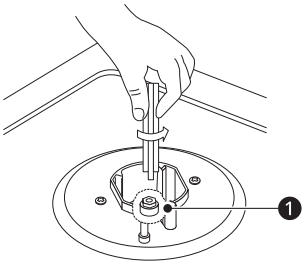

Adjustment of minimum Level of the Flame

1) Turn the taps down to minimum.
2) Remove the knob ❶, seal ring ❷, panel, film ❹. Place a flat bladed screwdriver ❻ in the left side of the tap. Adjust by-pass screw.
3) If by-pass screw adjusted correctly, the flame length is about 3 mm - 4 mm.
   - For butane propane gas, the adjusting screw must be tightly screwed in.
   - Refit the control knob.
   - Make sure that the flame does not go out by quickly turning from maximum flow to minimum flow. If it does, remove the control knob, make further adjustments to the gas flow, and test again.
4) Repeat this process for each one of the gas taps.

- CBGZ2414S

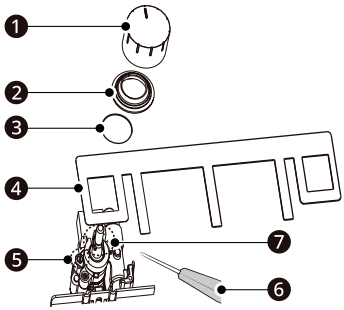

- CBGZ3016S

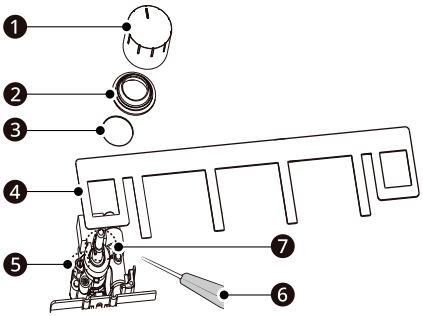

❸ Ring of Panel

❺ By-pass Screw

❼ Tap

⚠ CAUTION

- Do not dismantle the tap shaft: in the event of a malfunction, change the whole tap.
- Before placing the burners back on the top place, make sure that the injector is not blocked.
- A full operational test and a test for possible leakages must be carried out after gas conversion (such as soap water or gas detector).
- After completing conversion, a qualified technician or installer has to mark “V” on the right gas category to match with the setting in rating label. Remove the previous setting “V” mark.

OPERATION

Using the Surface Burners

How to Use the Appliance

- The minimum setting is at the end of the anticlockwise rotation of the control knob.
- All operation positions must be selected between the maximum and minimum position.
- The symbol ❺ on the control panel, next to the control knob indicates the burner in operation.

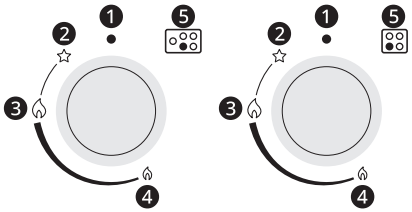

❶ Black Circle: Gas Off

❷ Star: Ignition Position

❸ Large Flame: Maximum Setting

❹ Small Flame: Minimum Setting

Automatic ignition with flame failure safety device (gas control)
The appliance is fitted with a flame failure safety device on each burner, which is designed to stop the flow of gas to the burner head in the event of the flame going out.

To ignite a burner:

- Push the control knob of the burner that you wish to light and turn it anticlockwise to the maximum position.
- If you keep the control knob holded down, the automatic ignition for the burner will operate.
- You should hold down the control knob for 15 seconds after the flame on the burner has lit. If after 15 seconds the burner has not lit, stop operating the device and open the compartment door and/or wait at least 1 minute before attempting a further ignition of the burner.
- After this 15-second interval, to regulate the flame you should continue turning the control knob anticlockwise until the flame is at a suitable level. The operating position MUST be at a position between the maximum and minimum position.
- To switch the burner off, turn the control knob fully clockwise to the gas off position.
- In case of power failure, the burners can be lit by carefully using a match.

Safety and Energy Saving

The diameter of the bottom of the pan should correspond to that of the burner.

Burners	Pans	
	min.	max.
Triple-Crown	200 mm	240 mm
Rapid	200 mm	240 mm
Semi-rapid	120 mm	160 mm
Auxiliary	120 mm	160 mm

⚠ CAUTION

- Be careful! When you use oversize pot, the surface and around product may be overheated. Use the pot that is described below.
- Do not use cookware that overlaps the edge of the burner.

Correct

- Always use cookware that is suitable for each burner to avoid wasting gas and discolouring the cookware.

- Place a lid on the cookware.

ENGLISH

- Only use pots, saucepans and frying pans with a thick, flat bottom.

- Always place the cookware right over the burners, not to one side. Place the cookware on top of the trivet.

- Handle cookware carefully when they are on the burner.

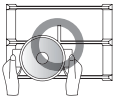

Incorrect

- Do not use small-diameter cookware on large burners. The flame should never come up the sides of the cookware.

- Avoid cooking without a lid or with the lid half open
  - as this wastes energy

- Do not use a pan with a convex or concave bottom.

- Do not place cookware on one side of a burner, as it could tip over. Do not use cookware with a large diameter on the burners near the controls, which when placed on the middle of the burner may touch the controls or be so close to them that they increase the temperature in this area and may cause damage.

- Never place cookware directly on top of the burner.

- Do not place anything, e.g. flame tamer, asbestos mat, between pan and pan support as it may cause serious damage to the appliance.

- Do not use excessive weight and do not hit the with heavy objects.

⚠ CAUTION

- Do not use roasting pans, frying pans or grill stones heated simultaneously on several burners because the resulting heat build-up may damage the appliance.
- Do not touch the top plate and trivet whilst in use and for a certain period after use.

NOTE

- As soon as a liquid starts boiling, turn down the flame to keep the liquid simmering.

MAINTENANCE

Care and Cleaning

Cleaning the Appliance

⚠ CAUTION

- Cleaning operations must only be carried out when the appliance is completely cool.
- The appliance should be disconnected from the main supply before commencing any cleaning process.
- Clean the appliance regularly, preferably after each use.
- Abrasive cleaners or sharp objects will damage the appliance surface; you should clean it using water and a little washing up liquid.

Usable

❶ Soft Cloth

❷ Neutral Detergent

Unsuitable

❶ Nylon Brush

❷ Metal Brush

❸ Edible Oil

❹ Acidic / Alkaline Detergent

❺ Abrasive

❻ Thinner / Benzene

Pan support and Control knobs

- Take off the pan support.
- Clean pan support and the control knobs with a damp cloth, washing up liquid and warm water. For stubbon soiling, soak beforehand.
- Dry everything with a clean soft cloth.

Top plate

- Regularly wipe over the top plate using a soft cloth well wrung-out in warm water to which a little washing up liquid has been added.
- Dry the top plate thoroughly after cleaning.
- Thoroughly remove salty foods or liquids from the hob as soon as possible to avoid the risk of corrosion.
- Stainless steel parts of the appliance may become discoloured over time. This is normal because of the high temperatures. Each time the appliance is used, these parts should be cleaned with a product that is suitable for stainless steel.
- When you finish cooking, ensure that the panel and accessories have cooled down completely. And remove the accessories (pan support, burnersand lids). If it is dirty, clean with a warm, damp sponge, using only stainless steel detergent. Then wipe dry with a soft cloth. After cleaning is complete, reassemble in reverse order.
- Do not allow liquids such as vinegar, coffee, milk, salt water, lemon or tomato juice to come in contact with stainless steel parts for extended periods of time.

⚠ WARNING

- Be careful. The water can be hot.

NOTE

- Use of abrasive powders or abrasive cleaners may cause scratches.
- Be careful. Do not use excessive force when cleaning the product. This can lead to scratches.
- Be careful. Do not allow water to enter the top ring.
- Clean the top plate (stainless steel) immediately after use. It will be difficult to clean completely if it is very dirty.

Burners

- Remove the burner lids and flame spreaders by pulling them upwards and away from the top plate.
- Soak them in hot water and a little detergent or washing up liquid.
- After cleaning and washing them, wipe and dry them carefully. Make sure that the flame holes are clean and completely dry.
- Wipe the fixed parts of the burner cup with a damp cloth and dry afterwards.
- Gently wipe the ignition device and flame supervision device with a well wrung-out cloth and wipe dry with a clean cloth.
- Before placing the burners back on the top plate, make sure that the injector is not blocked.

Reassemble the Auxiliary, Semi-Rapid, Rapid and Triple-Crown Burners as follows:

1 Place the flame spreader ❹ onto the burner cup ❺ so that the ignition device and the flame supervision device extend through their respective holes in the flame spreader. The flame spreader must click into place correctly.

2 Position the burner lids (❶, ❷ ,❸) onto the flame speader ❹ so that the retaining pins fit into their respective recesses.

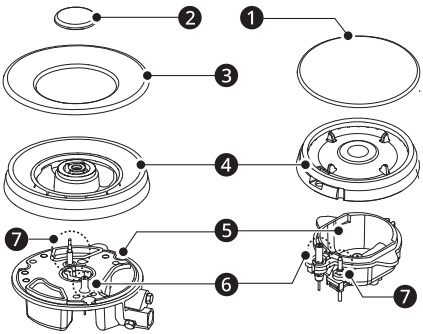

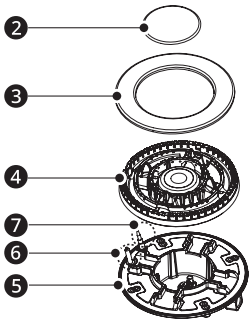

⚠ CAUTION

- Replace parts in the correct order after cleaning.
  - Do not mix up the top and bottom.
  - The locating pins must fit exactly into the notches.

TROUBLESHOOTING

Before Calling for Service

Repairs should be performed by a licensed technician only. Improper repair may result in considerable danger to you and others. However, some minor problems can be resolved as in the table below:

If a problem is not solved, please contact an LG Electronics Customer Information Centre.

Parts and Features

Symptoms	Possible Cause & Solution
Not ignited.	**No spark** • Check the electricity supply.
	The burner lid is badly assembled. • Assemble the lid correctly.
	The gas supply is closed. • Open the gas supply completely.
Badly ignited.	**The gas supply is not completely open.** • Open the gas supply completely.
	The burner lid is badly assembled. • Assemble the lid correctly.
	The ignition plug is contaminated with alien substance. • Wipe alien substance with a dry cloth.
	The burners are wet. • Dry the burners lids carefully.
	The holes in the flame spreader are clogged. • Clean the flame spreader.
Noise made when combusted and ignited.	**The burner lid is badly assembled.** • Assemble the burner lid correctly.
Flame goes out when in use.	**The flame supervision device is contaminated with alien substance.** • Clean the flame supervision device.
	Product being cooked has boiled over and extinguished the flame. • Turn off burner knob. Wait one minute and reignite zone.
	A strong draught may have blown the flame out. • Please turn off zone and check cooking area for draught such as open windows. Wait one minute and reignite zone.
Yellow flame	**The holes in the flame spreader are clogged.** • Clean the flame spreader.

Symptoms	Possible Cause & Solution
Yellow flame	**Different gas is used.** • Check the gas used.
Unstable flame	**The burner lid is badly assembled.** • Assemble the burner lid correctly.
Gas Smell	**Gas leakage** • Stop using the product and close the middle valve. Open the window to ventilate. Contact our service center by using a phone outside.

Customer Service

Our after-sales service is there for you if your appliance needs to be repaired. We will always find an appropriate solution. Please contact the dealer where you buy this appliance.

Rated voltage	220 - 240 V~
Rated frequency	50 Hz - 60 Hz

APPENDIX

Product Fiche

Product Fiche

(EU) No 66/2014

Trademark	LG Electronics	
Model identification	CBGZ2414S	CBGZ3016S
Type of hob	Gas hob	
Number of gas burners	4 burners 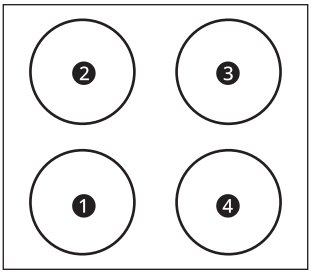	5 burners 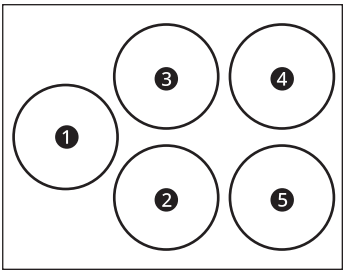
	❶ burner 1 ❷ burner 2 ❸ burner 3 ❹ burner 4 ❺ burner 5	
Heating technology	Gas	
Energy efficiency per gas burner ($EE_{gas\ burner}$)	burner 2: 57.8% burner 3: 57.0% burner 4: 57.0%	burner 1: 56.0% burner 3: 60.0% burner 4: 56.7% burner 5: 60.0%
Energy efficiency for the gas hob ($EE_{gas\ hob}$)	57.2 %	58.1 %

Memo

Memo

LG

Life's Good